BT40 ER 20 070 AD/6.3G15000 SL

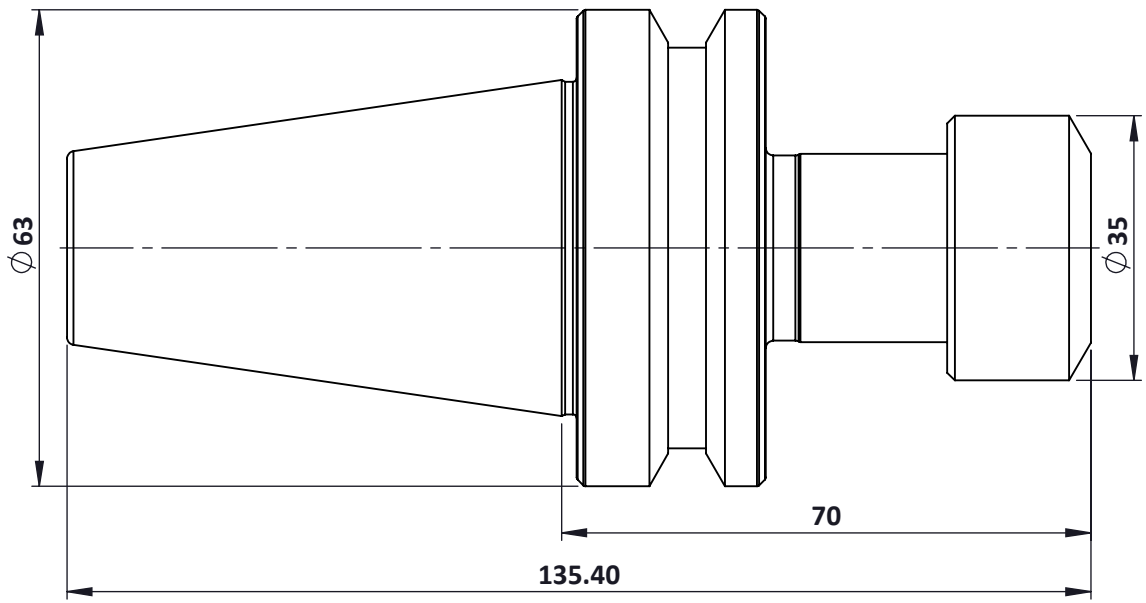

MATERIAL: 1.7147 (20MnCr5)

WEIGHT: 1.31

SHEET 1 OF 1

A4