BT40 FMH27 100 AD/6.3G15000 SL SP.S

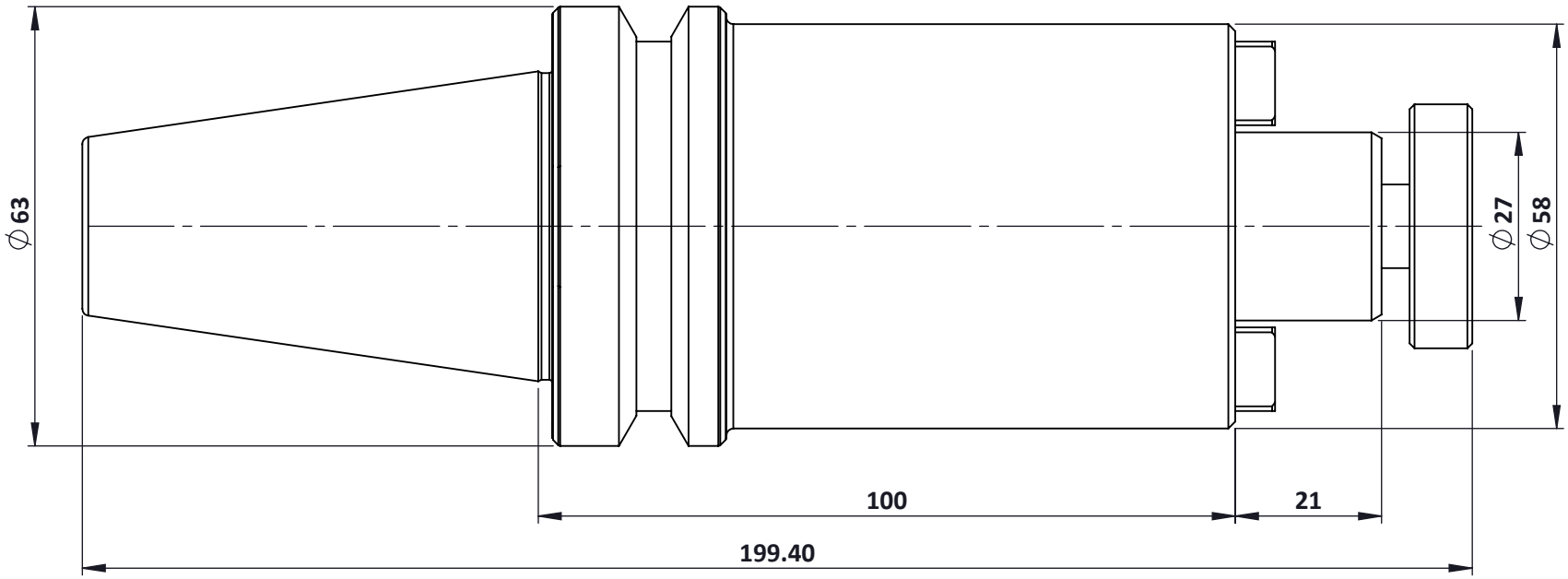

A4

MATERIAL:

WEIGHT:

SHEET 1 OF 1