BT40 ER 40 115 AD+B MLC

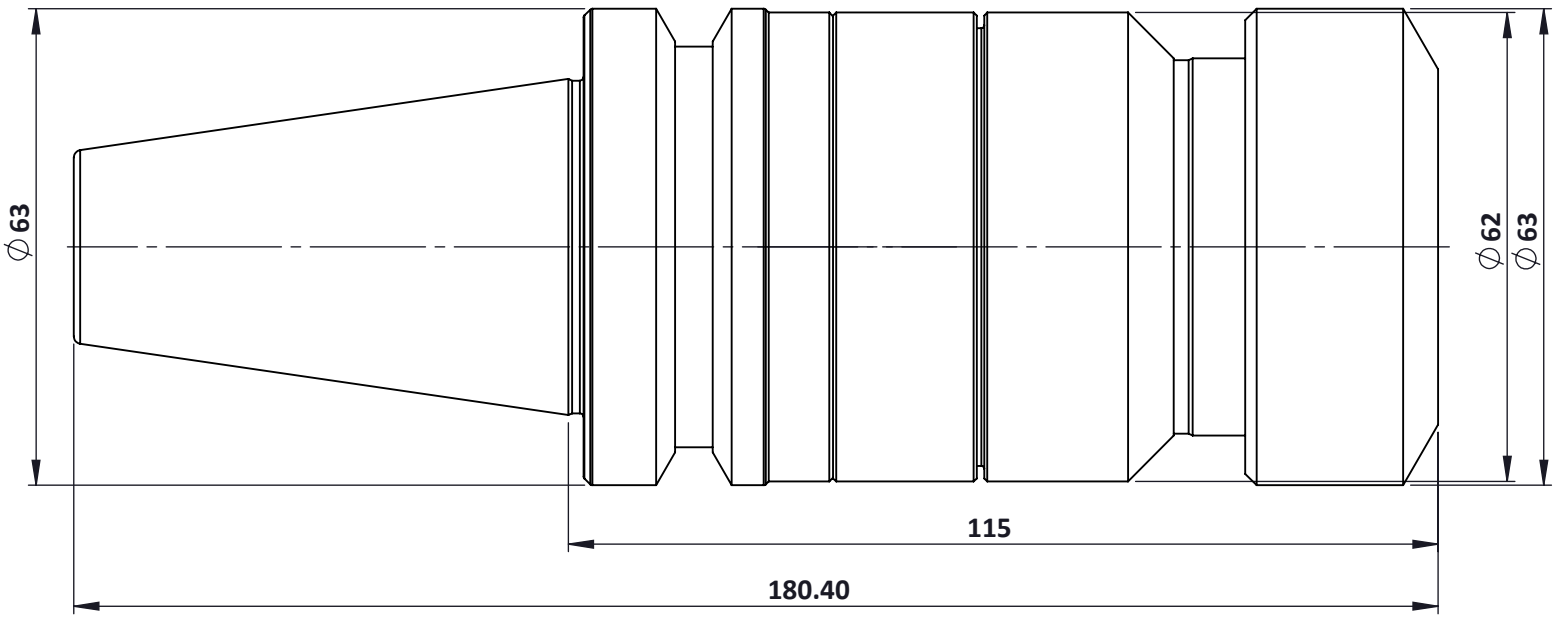

MATERIAL: 1.7147 (20MnCr5)

WEIGHT: 3.03

SHEET 1 OF 1

A4